004

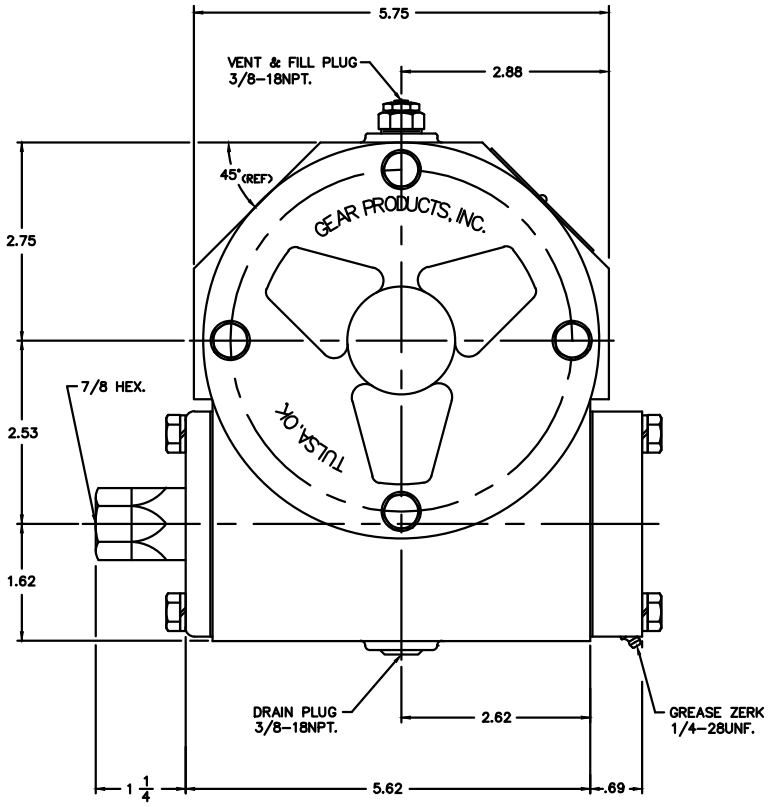

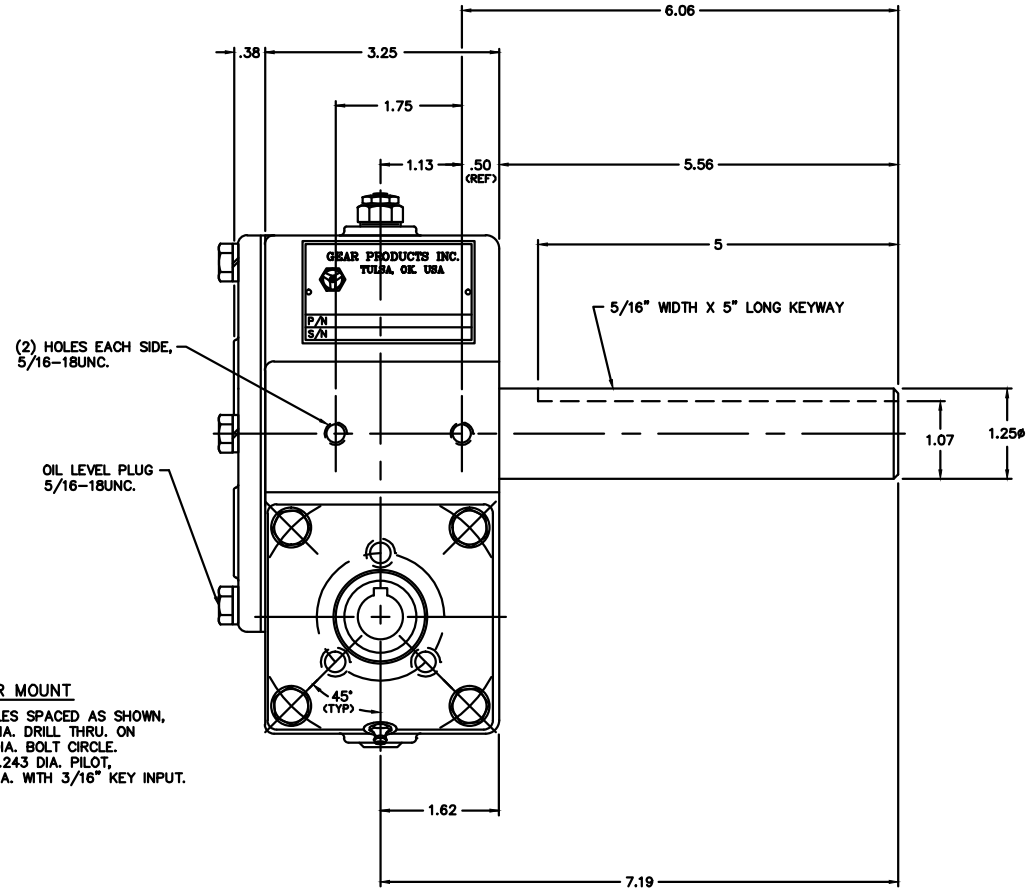

MOTOR MOUNT

(3) HOLES SPACED AS SHOWN,
9/32 DIA. DRILL THRU. ON
1.722 DIA. BOLT CIRCLE.
1.241/1.243 DIA. PILOT,
5/8" DIA. WITH 3/16" KEY INPUT.

PART #: 004-00010-1

008

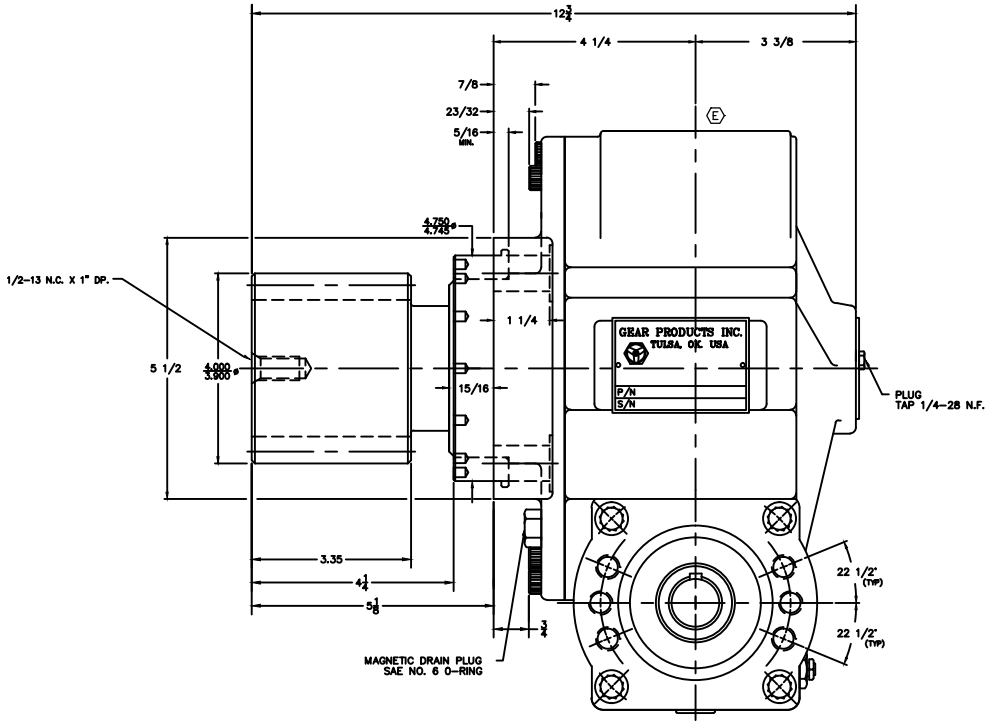

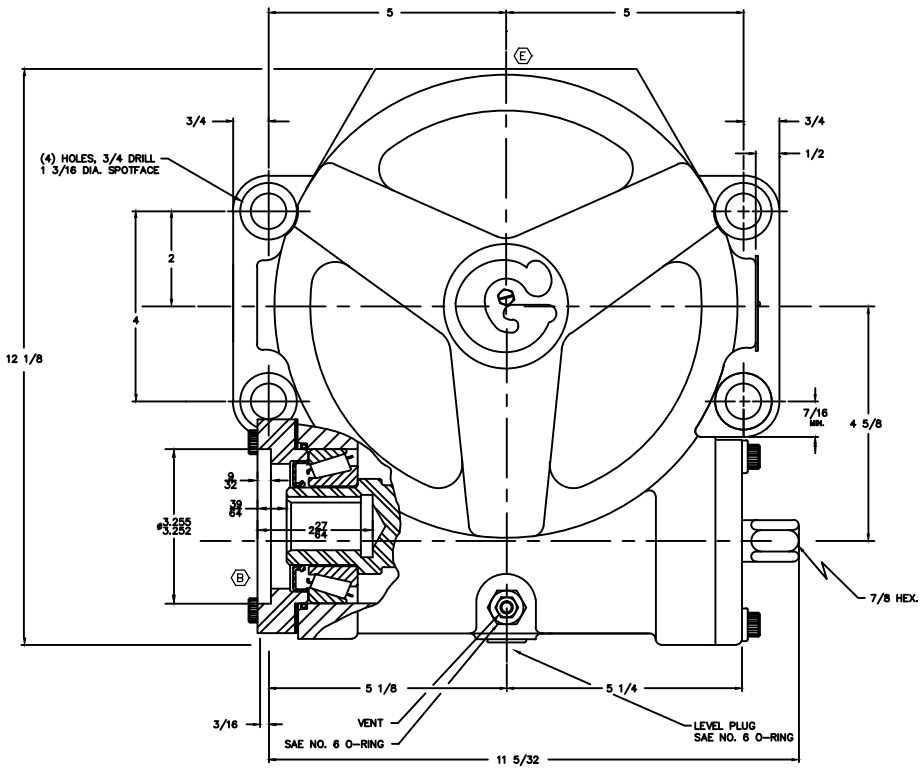

PART #: 008-00254-1

015

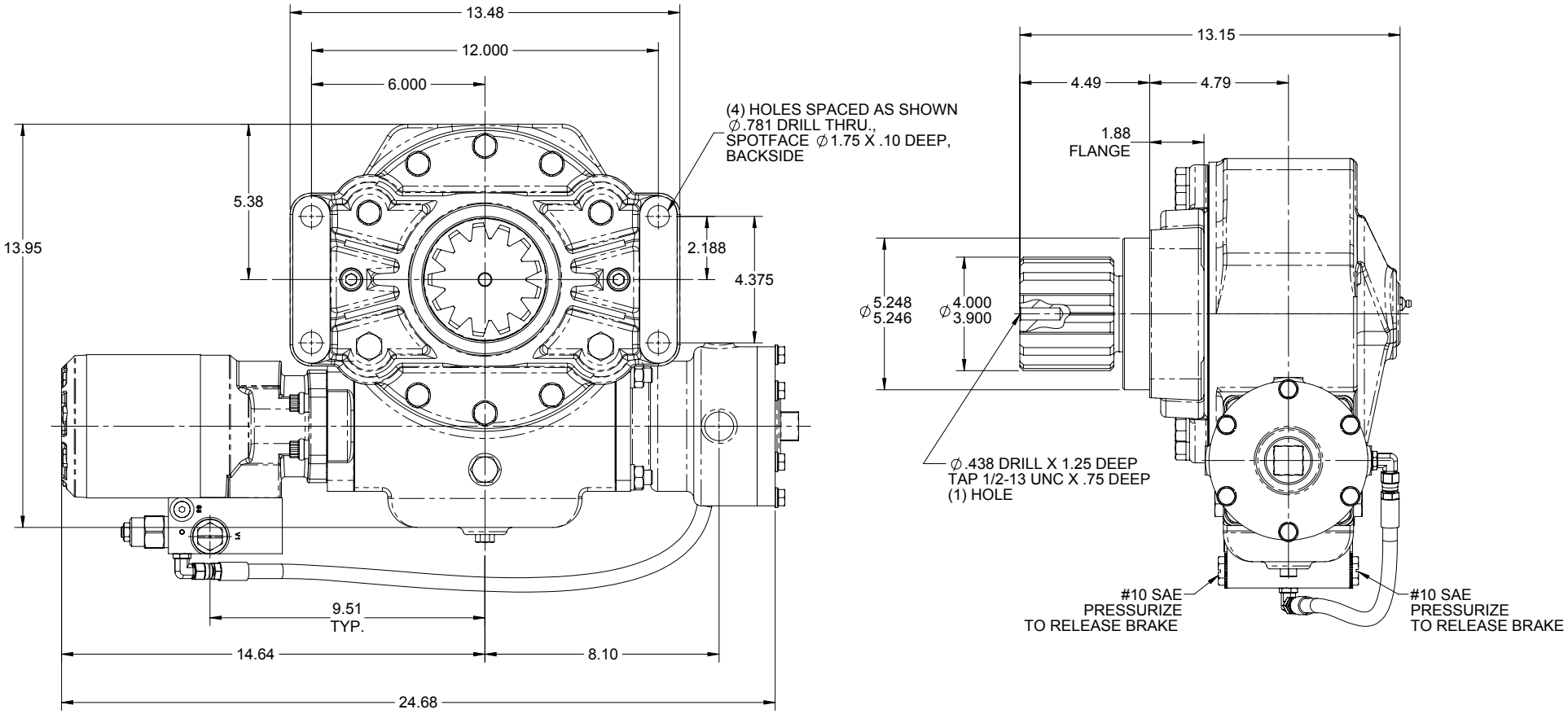

PART #: 015-00133-1